CODICE / CODE

106-206-306-TA-TB-NN

SCHEDA TECNICA / TECHNICAL DATA Ed. 30/01/24 Rev.0

106TA	106TB	106NN	206TA	206TB	206NN

306TA	306TB	306NN

Valvola termostatizzabile e detentore d'arredo a squadra 1/2"*3/4" EK attacco a compressione.
*Angle thermostatic radiator design valve and lockshield 1/2"*3/4" EK compression end.*

CARATTERISTICHE - FEATURES

- Corpo calotta e codolo ottone CW617N.
- Componenti interni ottone CW614N
- Volantino in ABS o ottone
- Guarnizione tenuta O-ring: EPDM
- Finitura: TA cromata, TB bianca RAL9016, NN nera RAL9004
- Filettature ISO 228/1

- *Brass CW617N body, tail and nut.*
- *Brass CW614N internal components.*
- ABS or brass cap
- Sealing gasket O-ring: EPDM
- *Finishing: TA chrome, TB white RAL9016, NN black RAL9004*
- *Threading to ISO 228/1*

DIMENSIONI PRINCIPALI - LEADING DIMENSIONS

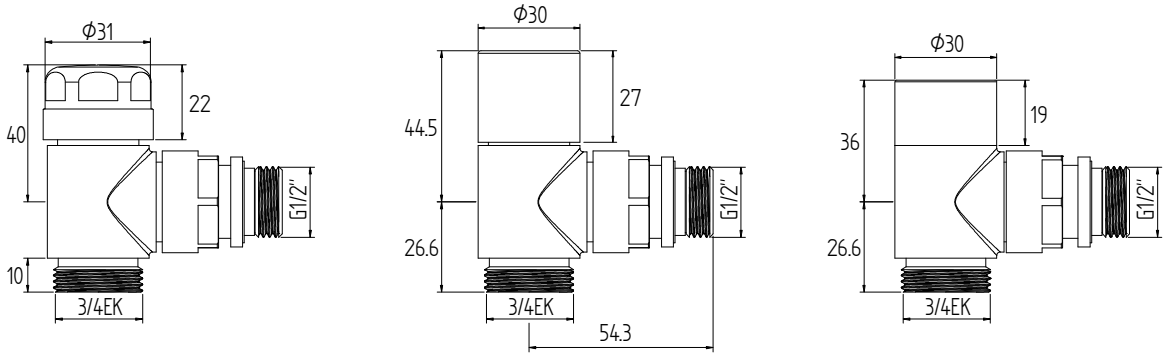

106 206 306

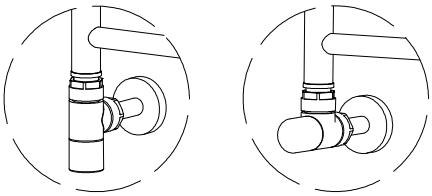

REVERSIBILE/*REVERSIBLE*

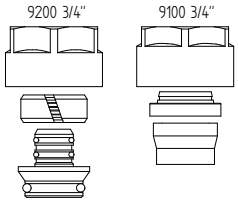

ADATTATORI/*FITTINGS*

APM Srl Via Mirabella, 1 – 28013 Gattico-Veruno (No) Italy
Tel. +39.0322.880707 – Fax +39.0322.880704 - info@apm.cc - **www.apm.cc**